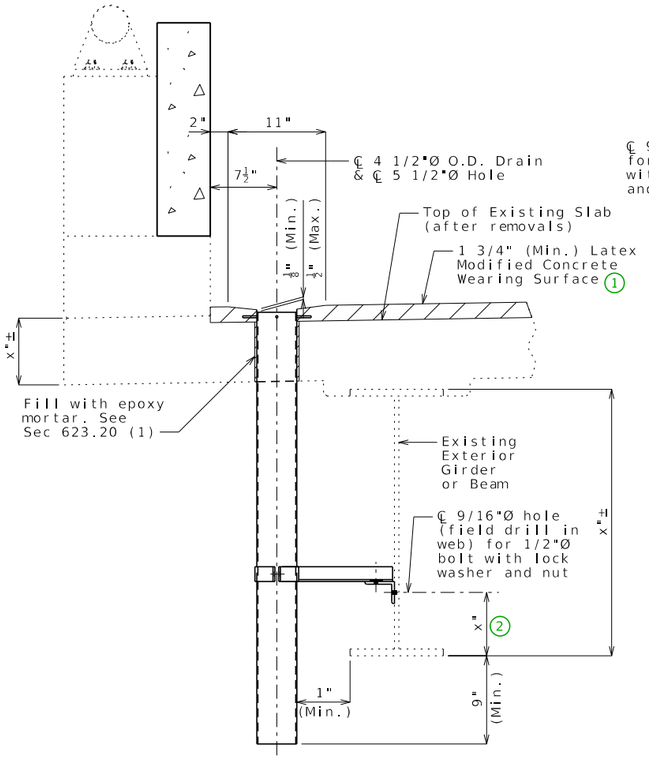

(1) Use backer rod around drain @ bottom of slab and epoxy inject from the top.

PART SECTION NEAR DRAIN

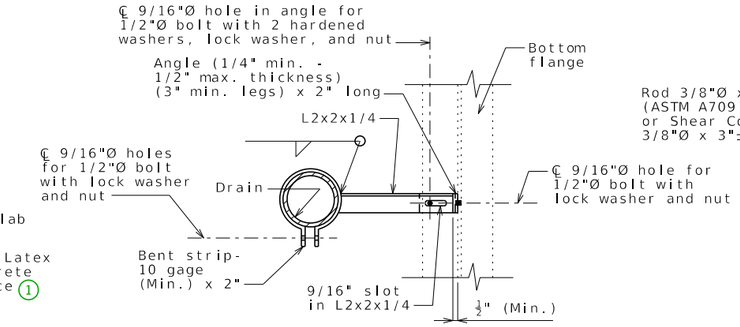

PART SECTION SHOWING BRACKET ASSEMBLY

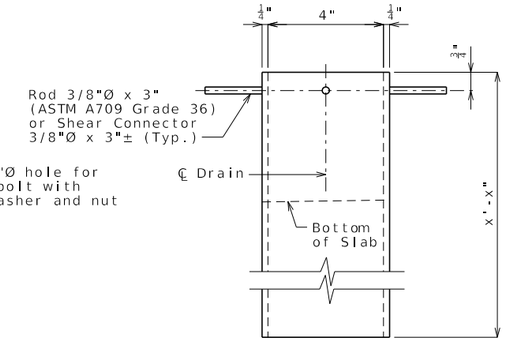

ELEVATION OF DRAIN

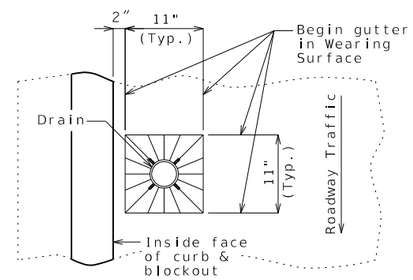

PART PLAN OF SLAB AT DRAIN

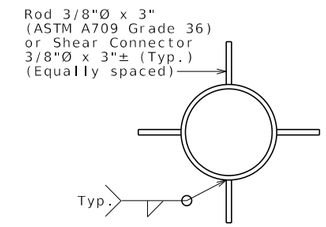

PLAN OF DRAIN

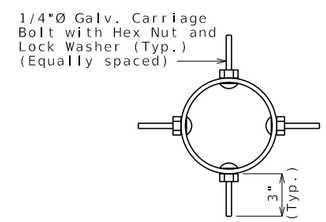

PLAN OF OPTIONAL FRP DRAIN

This Bridge Standard Drawing is meant to be used as a starting point. Modify details as needed.

Standard Drawing Guidance (Do not show on plans):

1. Modify as needed.
2. Approximately one sixth of girder/beam height; 5" minimum
3. Add Note H7.8.2 when attaching to weathering steel girders or beams (See EPG 751.50)
4. Omit underlined portion for prestressed girders.

General Notes:

Contractor shall have the option to construct either steel or FRP slab drains. All drains shall be of same type.

Slab drain bracket assembly shall be ASTM A709 Grade 36 steel.

The bracket assembly shall be galvanized in accordance with ASTM A123.

All bolts, hardened washers, lock washers and nuts shall be galvanized in accordance with AASHTO M232 (ASTM A153), Class C.

All 1/2-inch diameter bolts shall be ASTM A307, except as noted.

Shop drawings will not be required for the slab drains and the bracket assembly.

Cost of cored slab drains, complete in place, will be considered completely covered by the contract unit price for Cored Slab Drain per each.

Holes for slab drains shall be cored. Percussion drilling will not be permitted.

Slab drain locations may be shifted the minimum extent necessary to avoid slab reinforcement <u>and to allow for field drilling bolt hole in web of existing beam for bracket assembly attachment.</u> 4

3 Cored slab drains shall be placed vertically.

For details of plugging existing curb outlets, see Sheet No. _.

Notes for Steel Drain:

Slab drains shall be fabricated from 1/4-inch structural steel tubing ASTM A500 or A501.

The drains shall be galvanized in accordance with ASTM A123.

Drains shall be inserted through slab such that damage to galvanized coating is minimized.

Notes for FRP Drain:

Drains shall be machine filament-wound thermosetting resin tubing meeting the requirements of ASTM D2996 with the following exceptions:

Minimum reinforced wall thickness shall be 1/4 inch.

The resin used shall be ultraviolet (UV) resistant and/or have UV inhibitors mixed throughout. Drains may have an exterior coating for additional UV resistance. Care shall be taken to avoid damage to exterior coating during installation.

The color of the slab drain shall be gray (Federal Standard 26373). The color shall be uniform throughout the resin and any coating used.

The combination of materials used in the manufacture of the drains shall be tested for UV resistance in accordance with ASTM D4329 Cycle A. The representative material shall withstand at least 500 hours of testing with only minor discoloration and without any physical deterioration. The contractor shall furnish the results of the required ultraviolet testing prior to acceptance of the slab drains.

At the contractor's option, drains may be field cut. The method of cutting FRP slab drains shall be as recommended by the manufacturer to ensure a smooth, chip-free cut.

PART PLAN SHOWING CORED SLAB DRAIN LOCATIONS

CORED SLAB DRAINS

Detailed
Checked

Note: This drawing is not to scale. Follow dimensions.

Sheet No. of

DATE PREPARED	
8/21/2023	
ROUTE	STATE MO
DISTRICT	SHEET NO. 000
COUNTY	
JOB NO.	
CONTRACT ID.	
PROJECT NO.	
BRIDGE NO.	

DATE	DESCRIPTION

MISSOURI HIGHWAYS AND TRANSPORTATION COMMISSION
105 WEST CAPITOL
JEFFERSON CITY, MO 65102
1-888-ASK-MODOT (1-888-275-6636)

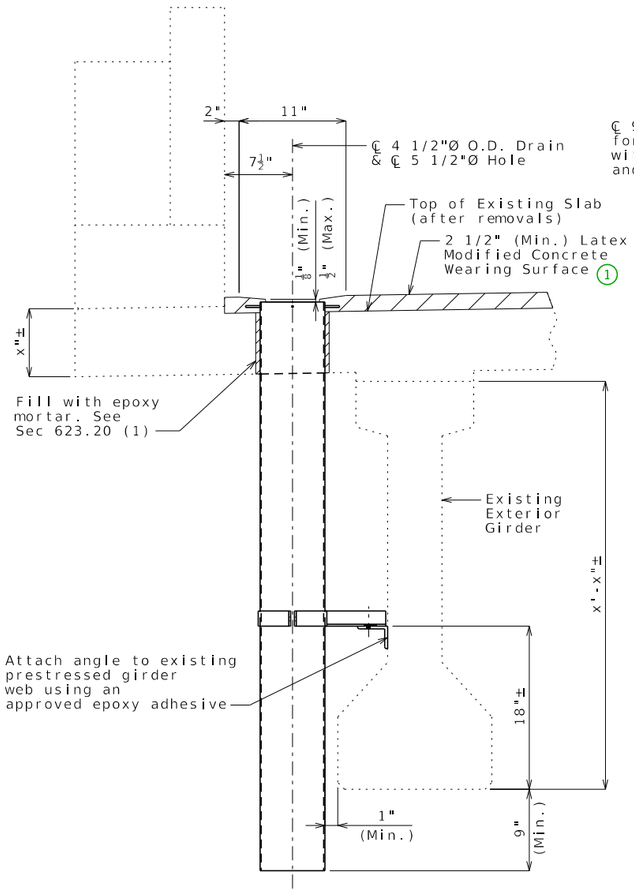

(1) Use backer rod around drain @ bottom of slab and epoxy inject from the top.

PART SECTION NEAR DRAIN

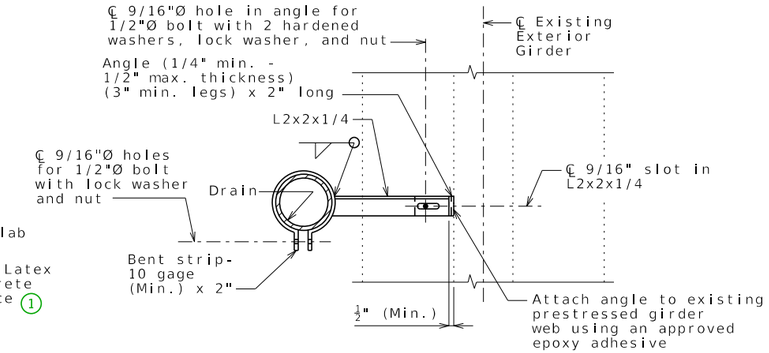

PART SECTION SHOWING
BRACKET ASSEMBLY

PRESTRESSED GIRDER, EXISTING CURB BLOCKOUT

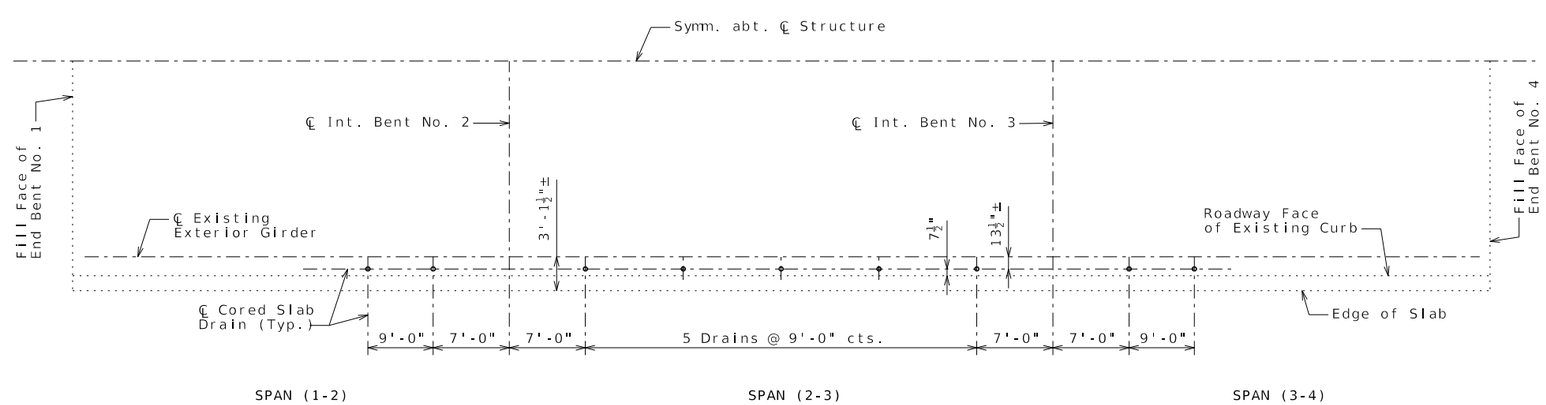

PART PLAN SHOWING CORED SLAB DRAIN LOCATIONS

EXAMPLE PLAN

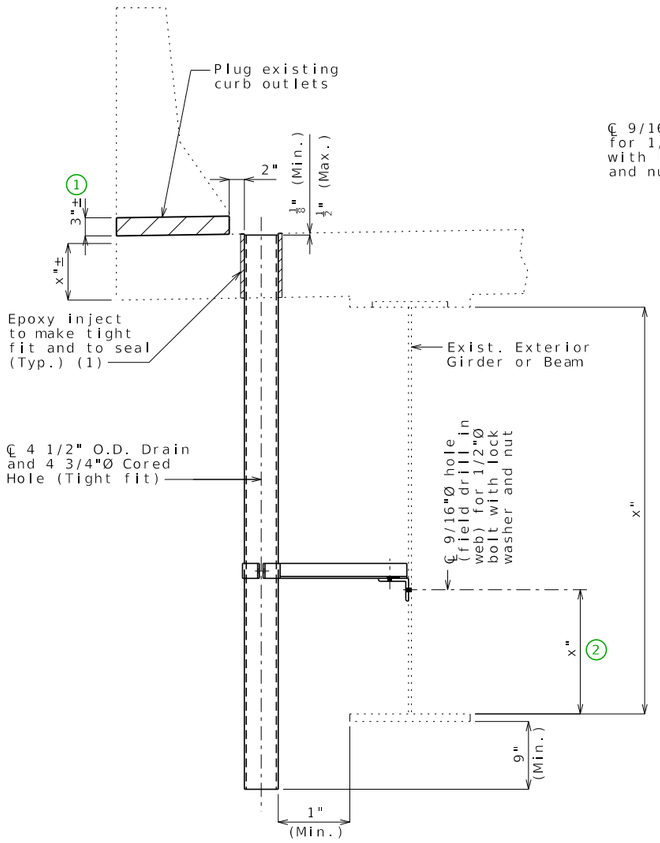

PART SECTION NEAR DRAIN

(1) Use backer rod around drain @ bottom of slab and epoxy inject from the top.

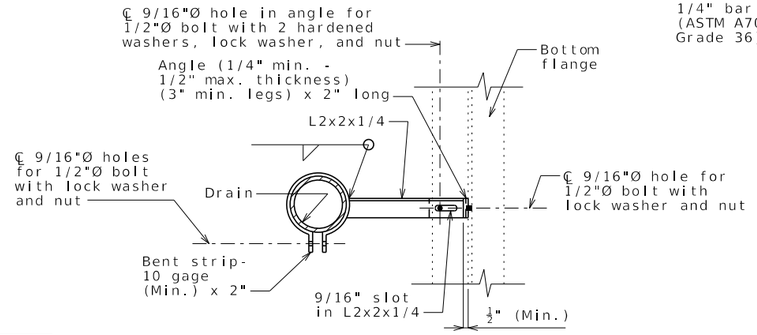

PART SECTION SHOWING BRACKET ASSEMBLY

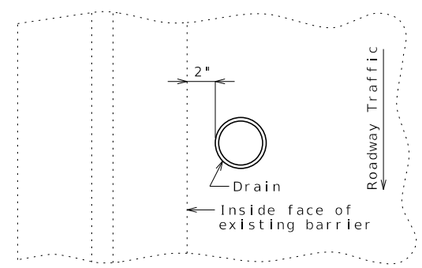

PART PLAN OF SLAB AT DRAIN

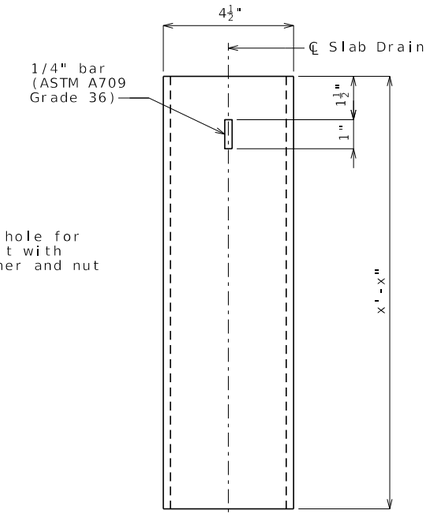

ELEVATION OF DRAIN

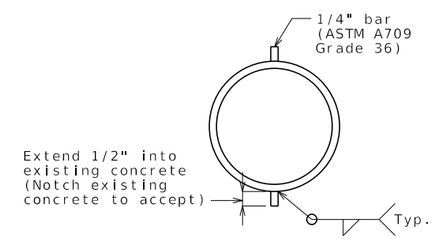

PLAN OF DRAIN

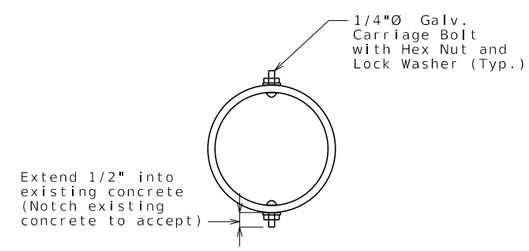

PLAN OF OPTIONAL FRP DRAIN

ANCHOR TO EXISTING SLAB, STEEL GIRDER

(Based on A02015 & A46301)